BRUSHLESS PROPULSION / TECHNICAL MANUAL

SV-UT4214

Compact brushless motor / Specifications & use

INPUT VOLTAGE	RATED VOLTAGE	MOTOR MASS
15-26 V DC	**22.2 V (6S)**	**185 g**

Product selection / Mounting / Test data / Operation

Delivery configuration and acceptance requirements follow mutually confirmed documents.

01 / SPECIFICATIONS

Specifications and scope

For three-phase brushless motor systems with 15-26 V DC input. Current and resistance entries are specific to each winding KV.

No.	Parameter	Specification
01	Input voltage	15-26 V DC
02	Rated voltage	22.2 V (6S)
03	Rated input current	KV340: >16 A / KV440: >20 A
04	No-load current (test voltage)	KV340: >0.8 A / KV440: >1.2 A (10 V)
05	Maximum current (source conditions)	KV340: 25 A / KV440: 32 A
06	Resistance (temperature dependent)	KV340: 64 mΩ / KV440: 46 mΩ
07	Product mass	185 g
08	Rotation (shaft-end view)	CW / CCW
09	Operating temperature	-10 ~ 65 °C
10	Storage temperature	-10 ~ 50 °C
11	Storage relative humidity	≤85%

Inspection conditions and parameter notes

Test ambient: 25 ± 5 °C; specified temperature rise ≤65 °C and no-load vibration ≤1.8 mm/s.

The > signs in rated and no-load current entries are retained from the source. Confirm unspecified tolerances and continuous-duty duration before ordering.

02 / MECHANICAL

Dimensions and mounting

Motor outline and mounting holes

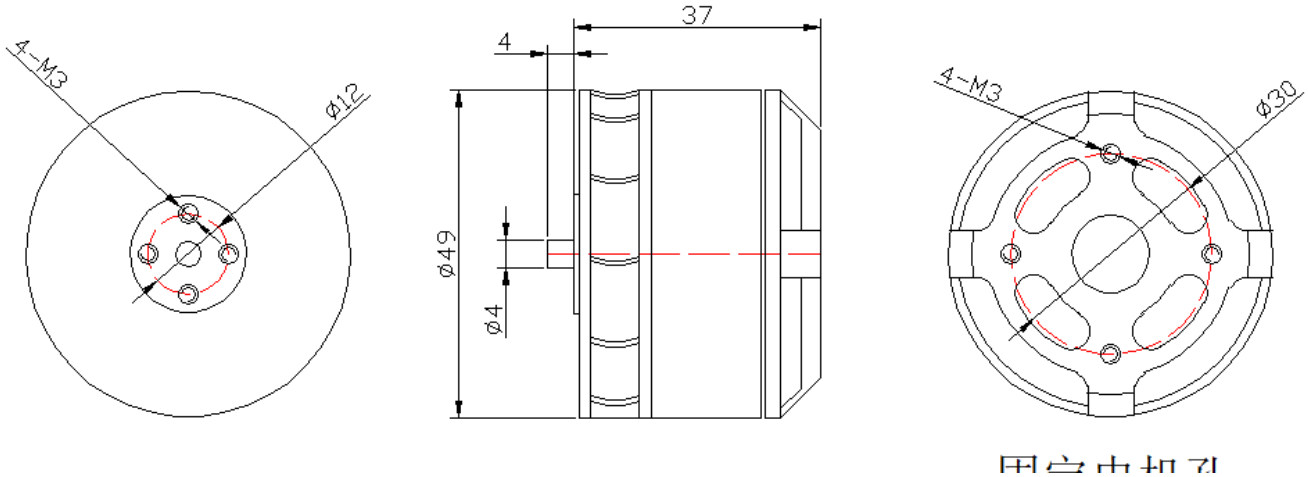

Drawing notes

Dimensions, holes, threads and angles retain the supplied drawing. Values have not been inferred from image scale. Before installation, check the actual model, screw length, shaft extension and approved drawing. Supply of optional accessories depends on the confirmed configuration.

03 / WIRING

Wiring and rotation

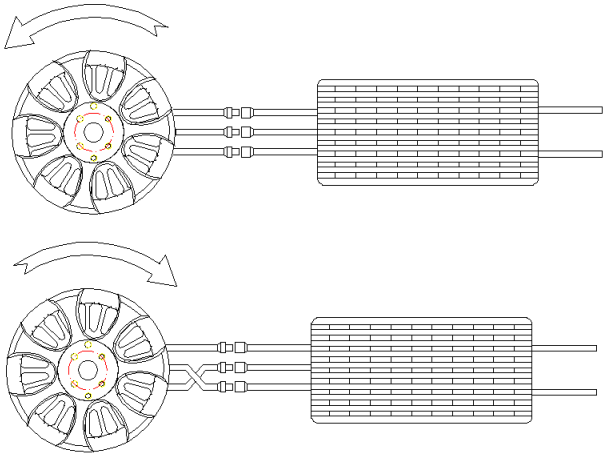

1. Confirm the rotation required by the propeller.

2. Remove the propeller and connect motor phase leads to the ESC outputs.

3. Check rotation safely. To reverse, isolate power, confirm safe discharge, then swap any two phase leads.

4. Install the propeller after confirming rotation.

System matching and commissioning

01 Match supply, ESC and propeller to the voltage range, winding KV, rated current and maximum current. Keep data for each KV separate; peak test points do not establish continuous output.

02 Check the outline, mounting holes and screw length. Check rotation safely with the propeller removed. To reverse rotation, isolate power, confirm safe discharge and swap any two phase leads.

03 Increase load gradually and monitor current, temperature rise, vibration and fasteners. Stop for abnormal noise, heat or binding. Store at -10 to 50 °C and no more than 85% relative humidity.

04 / PERFORMANCE 01

Performance test record

KV340 / 22.2 V / Carbon CF18-inch

No.	Voltage / V	Current / A	Input / W	Thrust / g	Torque / N·m	Speed / rpm	Motor eff. / %	Thrust eff. / g/W
1	22.2	8	177.6	1400	0.36	3506	74.4163	7.88
2	22.2	12	266.4	1990	0.47	4116	76.0389	7.47
3	22.2	16	355.2	2300	0.59	4457	77.5208	6.48
4	22.2	20	444	2760	0.68	4702	75.4059	6.22
5	22.2	24	532.8	3170	0.79	5031	78.1113	5.95
6	22.2	28.2	626.04	3560	0.9	5459	82.177	5.69

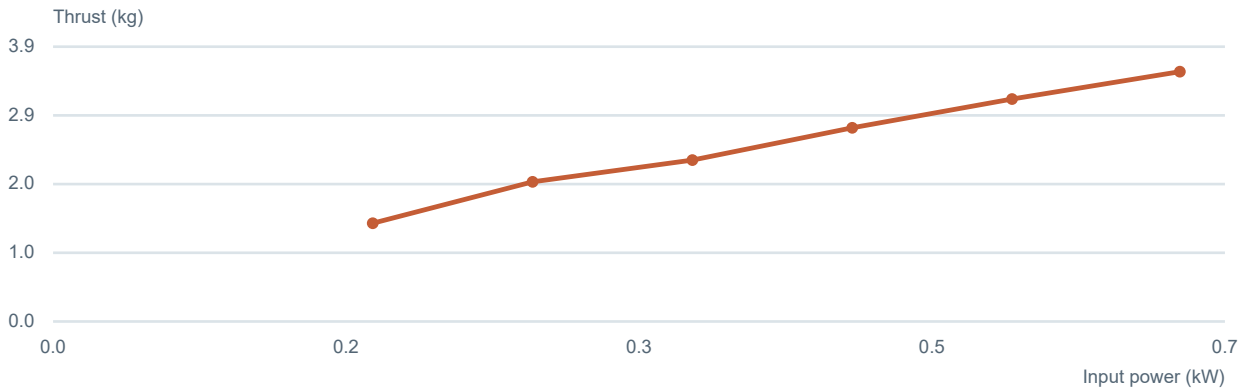

The curve plots the listed input power and thrust. Test ambient: 25 ± 5 °C. Points describe only the listed propeller, voltage and KV test conditions; they do not establish continuous-duty ratings.

KV340 / KV440 tests include 28.2 A / 50 A points, above the specified 25 A / 32 A maxima. Do not use them to increase operating-current limits or continuous-duty ratings.

04 / PERFORMANCE 02

Performance test record

KV440 / 22.2 V / Carbon CF18-inch

No.	Voltage / V	Current / A	Input / W	Thrust / g	Torque / N·m	Speed / rpm	Motor eff. / %	Thrust eff. / g/W
1	22.2	5	111	960	0.26	2843	69.7307	8.65
2	22.2	10	222	1600	0.42	3829	75.854	7.21
3	22.2	15	333	2220	0.55	4317	74.6616	6.67
4	22.2	20	444	2680	0.68	4748	76.1436	6.04
5	22.2	25	555	3090	0.79	5087	75.8215	5.57
6	22.2	30	666	3570	0.89	5443	76.1642	5.36
7	22.2	35	777	3910	0.99	5716	76.2611	5.03
8	22.2	40	888	4110	1.04	5927	72.6862	4.63
9	22.2	45	999	4520	1.13	6080	72.0134	4.52
10	22.2	50	1110	5140	1.28	6382	77.062	4.63

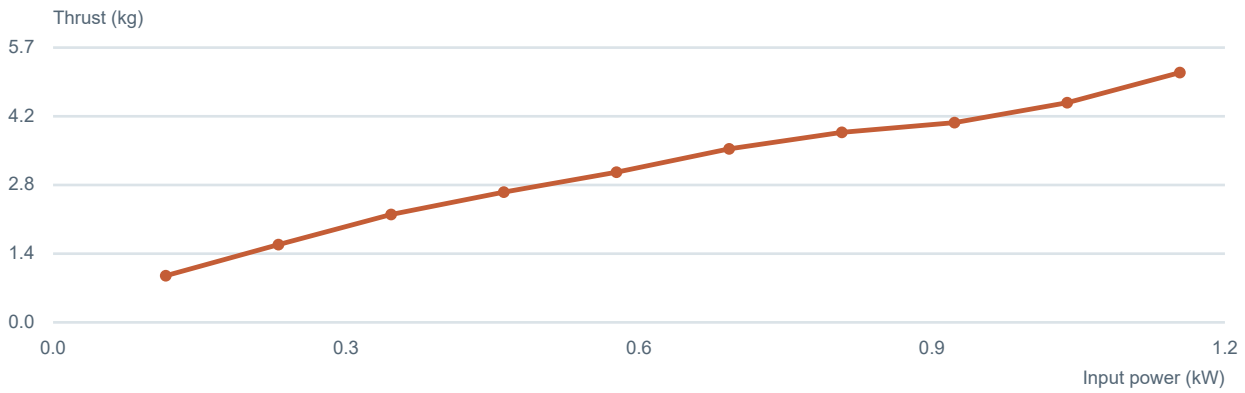

The curve plots the listed input power and thrust. Test ambient: 25 ± 5 °C. Points describe only the listed propeller, voltage and KV test conditions; they do not establish continuous-duty ratings.

KV340 / KV440 tests include 28.2 A / 50 A points, above the specified 25 A / 32 A maxima. Do not use them to increase operating-current limits or continuous-duty ratings.

04 / OPERATION & CARE

Safety, operation and care

Installation, wiring and commissioning require competent personnel. Isolate power and confirm safe discharge before changing connections.

01 Supply voltage, service life and environmental conditions may cause short circuits, fire or smoke. Provide appropriate protection in the complete machine. If safety is in doubt, stop use and contact technical support for inspection.

02 Do not damage windings, leads, edges or insulation during installation and wiring; damage may cause electric shock, burnout or fire. Never touch rotating parts with hands or fingers while energized; injury may result.

03 The motor is intended for installation in other equipment and does not carry machine-level warning labels. Contact technical support if labels are needed and provide guarding appropriate to the complete machine.

04 Temperature strongly affects service life. Keep the worst-case bearing temperature below the allowable upper limit of 100 °C. If measurement is not possible, verify life in the complete machine. Do not sustain a locked rotor or high bearing temperature: bearing deterioration causes noise, vibration and reduced life.

05 For custom speed control, check supply-voltage range, load variation and other changing conditions for abnormal noise, overheating or stalling.

06 Use the correct mounting method. Incorrect mounting causes noise and vibration and can shorten bearing life.

07 Never carry the motor by its leads or shaft. After a drop or equivalent impact, do not continue using it: insulation or bearings may be damaged.

08 Do not disassemble the motor. Safety and other performance are not assured after unauthorized disassembly.

09 Avoid the corrosive or harmful substances listed in the source: H2O, SO2, NO2, Cl2, and silicone-, cyano- and phenol-based substances. Check for these substances inside the complete machine before installation to prevent rust and reduced life.

10 Store away from those gases and harmful environments at -10 to 50 °C and no more than 85% relative humidity. Take particular care during extended storage. Sealed storage is required, for no more than six months under normal temperature and humidity conditions.

06 / SPECIFICATION AGREEMENT

Specification agreement and notes

01 The integrator must confirm compatibility with the complete machine in structure, dimensions, service life, noise, vibration and performance.

02 Operation outside the specified limits is outside the original specification guarantee.

03 Contact technical support before changing the machine specification or using the motor in another product.

04 Specification changes affecting performance or characteristics require samples and verification against mutually confirmed documents before implementation.

05 Within the agreed specification limits, components may be changed to improve performance without separate notice. Record critical delivery requirements in the mutually confirmed documents.

06 Agree in advance on any necessary requirements not addressed in this manual.

07 Resolve compatibility issues by mutual agreement using the confirmed specification documents as the basis.

Data and configuration notes

KV340 / KV440 tests include 28.2 A / 50 A points, above the specified 25 A / 32 A maxima. Do not use them to increase operating-current limits or continuous-duty ratings.

Use these data for preliminary selection. Delivery configuration, propeller and acceptance requirements are subject to mutually confirmed documents.

This edition is based on the manuals, photographs and separate drawings received on 22 October 2026. Unspecified parameters are not inferred. Contact technical support for operating points requiring further verification.

Business enquiries

Product selection · Project enquiries · Technical support

SV-UT4214

Zhuhai SV Tech Co. Ltd.

ADDRESS	35 Jinzhou Road, Jinding, Xiangzhou District, Zhuhai, Guangdong, China
CONTACT	**Mr. Liu**
PHONE	**+86 18688194199**
EMAIL	**lhc1983@gmail.com**