Product and selection

AXR 8460 MG-D

Aircraft control surfaces / space-constrained actuation

Stall torque

4.6 kg·cm

No-load speed

0.059 s/60°

Comparison voltage

7.4 V

Mini servos offer additional torque options within a compact envelope. Check output-shaft position, mounting-hole spacing and connector clearance together. A longer servo arm reduces available linkage force; model names and peak torque alone do not establish compatibility.

Performance by voltage

Comparison voltage (V)	Stall torque (kg·cm)	No-load speed (s/60°)	Running current (A)	Stall current (A)
4.8	2.9	0.083	0.04	0.7
6	3.8	0.071	0.09	1
7.4	4.6	0.059	0.11	1.2

Stall torque is not a continuous load rating. Consider rated torque and duty cycle when sizing the mechanism. The operating range specifies allowable supply voltage; it does not imply that test data exist at every voltage.

Mechanical and control specifications

Operating voltage	4.8 - 8.4 V
Rated torque	1.5 kg·cm @ 7.4 V
Dimensions	23.5 × 11.8 × 27.9 mm
Weight	16.7 g
Motor type	Iron-core motor
Gear material	Stainless steel gears
Bearing count	2
Lead length	250 mm
Control signal	PWM
Operating frequency	333 Hz
Reference pulse width	1520 µs
Pulse width and angle	500 / 1500 / 2500 µs → -90 / 0 / 90°

The source lists a 1520 µs reference pulse and a 1500 µs position centre. Confirm the neutral setting and usable travel for the controller and delivered version.

Drawing and tabulated dimensions may use different datums. Confirm the final mounting drawing and interface version before machining mating parts.

Mounting dimensions

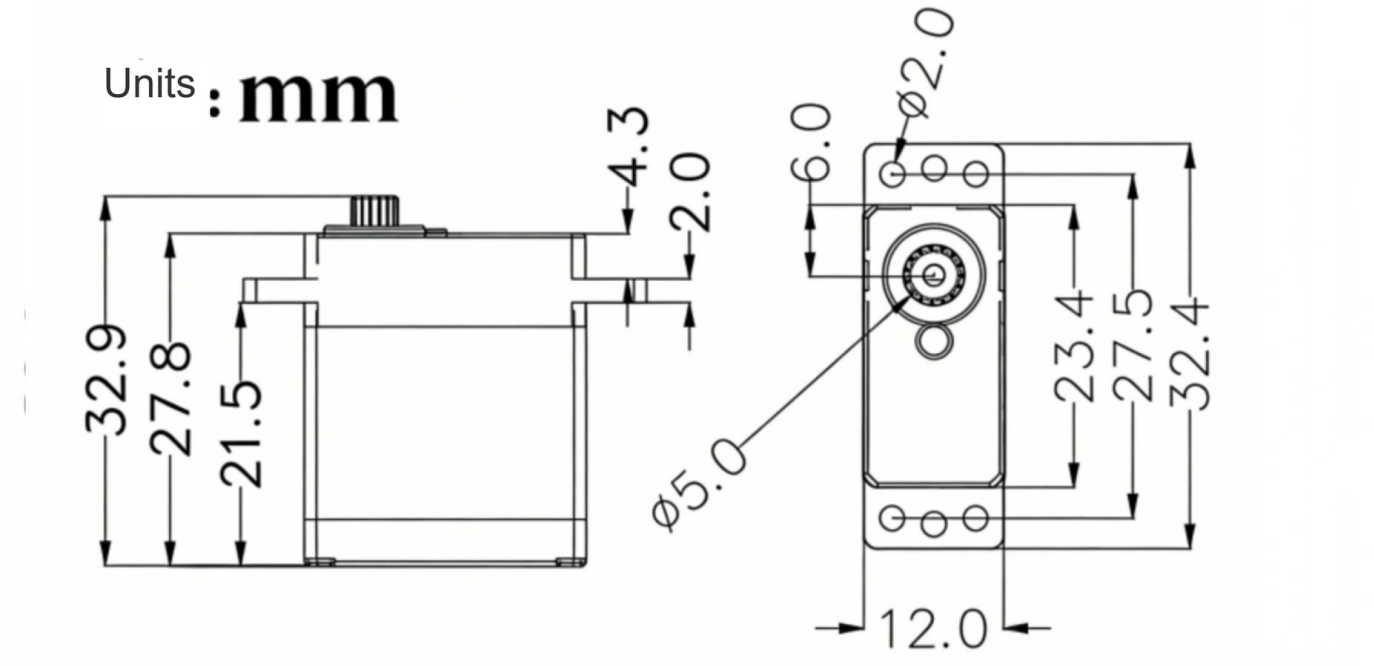

Drawing and tabulated dimensions may use different datums. Confirm the final mounting drawing and interface version before machining mating parts.

Installation and integration

Check the supply, pulse width, mounting pattern and arm connection first. Commission with the load removed or limited, verify centre position, direction and mechanical travel, then validate the working load gradually. Allow for transient current and prevent voltage drop, reversed connections and sustained contact with mechanical stops.

Specifications: AXR 2026 product documentation, organised by test voltage. · AXR 2026 · Source catalog page 15

https://axrsystems.com/en/products/axr-8460-mg-d/

Business enquiries

Product selection · Project enquiries · Technical support

AXR 8460 MG-D

Zhuhai SV Tech Co. Ltd.

ADDRESS	35 Jinzhou Road, Jinding, Xiangzhou District, Zhuhai, Guangdong, China
CONTACT	**Mr. Liu**
PHONE	**+86 18688194199**
EMAIL	**lhc1983@gmail.com**