Product and selection

AXR 7350 MG-D

Light aircraft control surfaces / compact mechanisms

Stall torque

1.8 kg·cm

No-load speed

0.07 s/60°

Comparison voltage

7.4 V

Lightweight platforms are often limited by mass and installation space. Micro servos are a useful starting point for small control surfaces and compact linkages. Required torque still depends on the load, lever arm and movement speed, so compare specifications at the intended supply voltage.

Performance by voltage

Comparison voltage (V)	Stall torque (kg·cm)	No-load speed (s/60°)	Running current (A)	Stall current (A)
4.8	1	0.09	0.07	0.8
6	1.5	0.08	0.09	0.9
7.4	1.8	0.07	0.11	1.3

Stall torque is not a continuous load rating. Consider rated torque and duty cycle when sizing the mechanism. The operating range specifies allowable supply voltage; it does not imply that test data exist at every voltage.

Mechanical and control specifications

Operating voltage	4.8 - 8.4 V
Rated torque	0.4 kg·cm @ 7.4 V
Dimensions	19.6 × 8.3 × 19.85 mm
Weight	5.5 g
Motor type	Coreless motor
Gear material	Metal gears
Bearing count	No data at this test point
Lead length	185 mm
Control signal	PWM
Operating frequency	333 Hz
Reference pulse width	1520 µs
Pulse width and angle	500 / 1500 / 2500 µs → -90 / 0 / 90°

The source lists a 1520 µs reference pulse and a 1500 µs position centre. Confirm the neutral setting and usable travel for the controller and delivered version.

Mounting dimensions

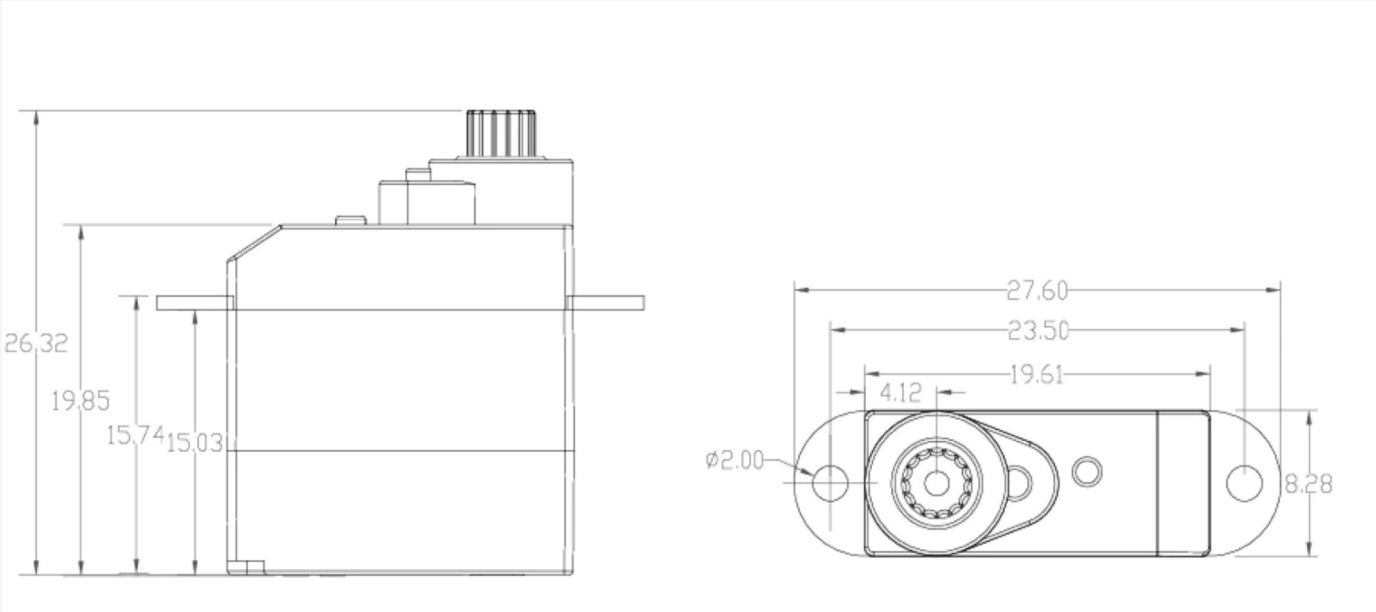

Drawing and tabulated dimensions may use different datums. Confirm the final mounting drawing and interface version before machining mating parts.

Installation and integration

Check the supply, pulse width, mounting pattern and arm connection first. Commission with the load removed or limited, verify centre position, direction and mechanical travel, then validate the working load gradually. Allow for transient current and prevent voltage drop, reversed connections and sustained contact with mechanical stops.

Specifications: AXR 2026 product documentation, organised by test voltage. · AXR 2026 · Source catalog page 4

https://axrsystems.com/en/products/axr-7350-mg-d/

Business enquiries

Product selection · Project enquiries · Technical support

AXR 7350 MG-D

Zhuhai SV Tech Co. Ltd.

ADDRESS	35 Jinzhou Road, Jinding, Xiangzhou District, Zhuhai, Guangdong, China
CONTACT	**Mr. Liu**
PHONE	**+86 18688194199**
EMAIL	**lhc1983@gmail.com**